ROTEX
Engineering For The Future

POSITIONER

SMART POSITIONER POSIDAPT SERIES - RTX 3/4

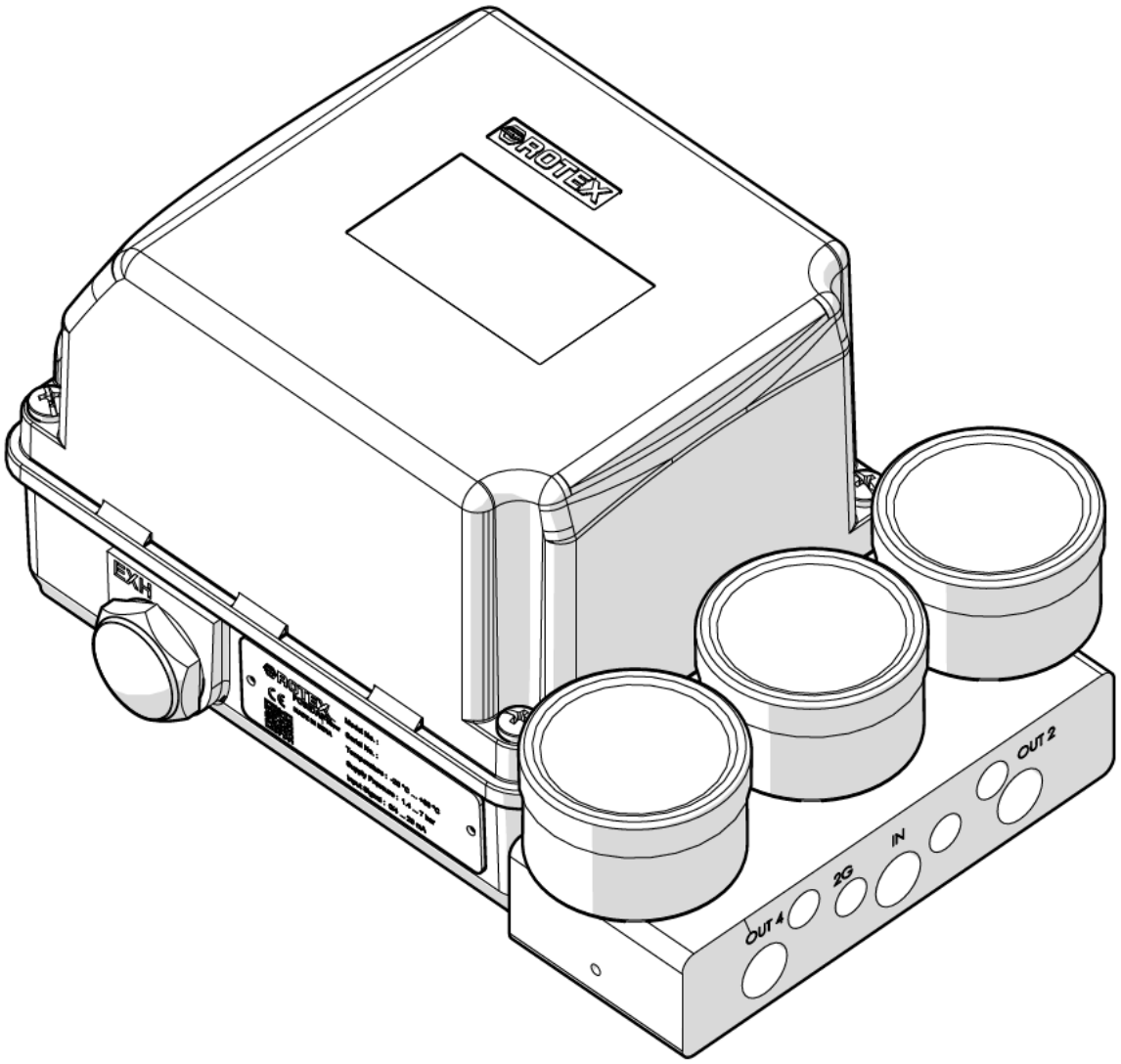

Installation Operation and Maintenance Manual

I. Contents

1. Safety 3
2. Use in potentially explosive atmospheres in accordance with ATEX and IECEx ... 4
3. POSIDAPT Product Summary 6
3.1. Key Features 6
3.2. POSIDAPT Series 7
4. Technical Specification 8
5. POSIDAPT RTX 3/4 Overview 12
6. Block Diagram: 17
7. Dimensional Drawing: 19
8. Installation / Mounting: 20
8.1. Safety Instructions: 20
8.2. Mounting Positioner on Control Valve: 23
8.3. Mounting Positioner on a Rotary Actuator: 28
9. Electrical Connection 31

1. Safety

Warning notice

This manual contains notices you have to observe in order to ensure your personal safety, as well as to prevent damage to property. The notices referring to your personal safety are highlighted in the manual by a safety alert symbol notices referring only to property damage have no safety alert symbol. These notices shown below are graded according to the degree of danger.



WARNING:

- **If not observed, user incurs a high risk of severe damage to product and/or fatal injury to personnel.**



CAUTION:

- **If not observed, user may incur damage to product and/or injury to personnel.**



NOTE:

- *Advisory and information comments provided to assist maintenance personnel to carry out maintenance procedures.*

Qualified Personnel

The product/system described in this documentation may be operated only by personnel qualified for the specific task in accordance with the relevant documentation, in particular its warning notices and safety instructions.

Qualified personnel are those who, based on their training and experience, are capable of identifying risks and avoiding potential hazards when working with these products/systems.

Disclaimer of Liability

This manual provides information on installation, operation and maintenance procedures and related instructions for the ROTEX make POSITIONER (Smart Positioner).

The aim of this literature is to support the use of products in correct manner, and all the technical information provided in the catalogue.

The manual should be given to the end user.

The manual can be changed or revised without any prior notice. Any changes in product's specification, structure, and/or any components may not result immediate revised version of the manual.

The manual should not be duplicated or reproduced for any purpose without any consent of Rotex Manufacturers & Engineers Private Limited, INDIA.

Manufacturer Warranty

For the safety, it is vital to follow instructions in the manual. It is not ROTEX's liability for any damages which caused by users' negligence.

It is not ROTEX's liability for any damages or accidents which resulted by any alteration or modification of the product and parts. If alteration or modification is necessary, please contact the ROTEX directly.

ROTEX warrants the product from the date of original retail purchase of the product for one (1) year, except as otherwise stated.

ROTEX warranty will not cover the products that the product have been subjected to abuse, accident, alteration, modification, tampering, negligence, misuse, faulty installation, lack of reasonable care, repair or service in any way that is not contemplated in the documentation for the product, or if the model or serial number has been altered, tampered with, defaced or removed; damages that occurs in shipment, failure due to power surge, and cosmetic damage. Improper or incorrectly performed maintenance or report voids this Limited Warranty.

For detailed warranty information, please contact:

ROTEX MANUFACTURERS & ENGINEERS PRIVATE LIMITED, R852/853 T.T.C. Industrial Area, Rabale, Navi Mumbai 400701.

2. Use in potentially explosive atmospheres in accordance with ATEX and IECEx

- **Product identification**

Depending on the type of explosion protection, an Ex name plate is attached on the positioner.

This indicates the level of explosion protection and the device's relevant Ex certificate.

- **Ex marking**

ATEX

Type Examination Test Certificate KLEX 25 ATEX 0009X

II 1 G Ex ia IIC T6 Ga (-40°C ≤ Ta ≤ +60°C)

II 1 G Ex ia IIC T5 Ga (-40°C ≤ Ta ≤ +80°C)

II 1 G Ex ia IIIC T_{200}80°C Da (-40°C ≤ Ta ≤ +60°C)

II 1 G Ex ia IIIC T_{200}100°C Da (-40°C ≤ Ta ≤ +80°C)

IECEx

Type Examination Test Certificate IECEx KLCS 25.0008X

Ex ia IIC T6 Ga (-40°C ≤ Ta ≤ +60°C)

Ex ia IIC T5 Ga (-40°C ≤ Ta ≤ +80°C)

Ex ia IIIC T_{200}80°C Da (-40°C ≤ Ta ≤ +60°C)

Ex ia IIIC T_{200}100°C Da (-40°C ≤ Ta ≤ +80°C)

Mounting

The installation, commissioning, maintenance and repair of devices in potentially explosive atmospheres must only be carried out by appropriately trained personnel. Works may be carried out only by persons, whose training has included instructions on different types of protection and installation techniques, concerned rules and regulations as well as general principles of zoning. The person must possess the appropriate competences for the type of work to be conducted.

The safety instructions for electrical apparatus in potentially explosive areas must be in accordance with Directive 2014/34/EU (ATEX) and IEC 60079-14 (Installation of electrical equipment in potentially explosive areas).

Comply with the applicable regulations for the protection of employees to ensure safe operation.

Note
Observe the device's applicable specifications and special conditions in accordance with the type examination certificate.

- Any manipulation in the device by users is not permitted. Only the manufacturer may modify the device.
- The device may only be operated using instrument air that is free from oil, water and dust.

- **Cable gland**

Appropriately sized certified weatherproof IP66/67 cable glands and plugs to be used.
M20 × 1.5 OR 1/2 " NPT cable gland for explosion protection must be used. The permissible ambient temperature range of the cable gland is -50 to 100 °C. When using the cable gland, make sure that the ambient temperature is within this range.

- **ATEX und IECEx electrical data**

Type of protection Ex i, intrinsic safety

Intrinsic Safety Parameters

Terminals	Vmax (V)	Imax (mA)	Pi (mW)	Ci (nF)	Li (µH)
Terminals 11 and 12: (Control Current Input AI)	30	100	750	0	0
Terminals 21 and 22: (Position Transmitter AO)	30	100	750	0	0

- **Special conditions of use**
  1. Cleaning of the surface shall only be done with wet cloth to eliminate Electro Static Discharge risk.
  2. The POSIDAPT main electronics enclosure contains aluminium and is considered to present a potential risk of ignition by impact or friction. Care must be taken into account during installation and use to prevent impact or friction.
  3. The POSIDAPT shall be installed in such way that danger of mechanical impact on glass window is avoided.

3. POSIDAPT Product Summary

3.1. Key Features

LCD Display

- LCD display for parameter settings.
- No abbreviation and short form used.
- User friendly interface
- On screen diagnostic, alarm and error messages
- Structure menu for parameter, setup and diagnostics.

Contactless Feedback

- Contactless feedback, with patented algorithm
- Blind mount, eliminated need to oriented mounting angle.
- Remote mounting

Push Button

- Push button on device allows managing menu, diagnostics and alarms.
- Quick calibration using two push buttons.

IP66

- Enclosed in IP66 enclosure, ensure lifetime guaranty and reliability.

Electronics

- Encapsulated electronic provide protection against moisture and humidity, avoiding latency failure of electronics.
- Modular electronic and Position Transmitter.

Servo Valve

- Metal-to-metal contact, low friction and high sensitivity.
- Can accommodate wide variety of volume without need of flow control valve or volume booster.
- Build in feedback sensor.

Communication

- HART protocol

Product Variant

- POSIDAPT series has two product variants as, Elite and Prime.

3.2. **POSIDAPT Series**

NEW SERIES RTX 3 & 4

POSIDAPT® prime

Basic Parameters with Auto-Calibration

POSIDAPT® elite

Advanced Parameters and Basic Diagnostics with Auto-calibration, Alerts and Counters, Offline Tests (Step Response Test, Dynamic Response Test, Dead band Test), HART

Model	Basic Parameters	Servo Health Test	Advance Parameters	HART#	Alerts & Basic Diagnostics	Position Transmitter	Basic Diagnostics	Step Response Test	Dynamic Response Test	Dead band Test
Prime	✓	✓	-	-	-	✓	-	-	-	-
Elite	✓	✓	✓	✓	✓	✓	✓	✓	✓	✓

#HART 7 with backward compatibility up to HART 5. DTM framework version up to 2.0 supported

4. **Technical Specification**

- **Overview**
  - **General**
    - Loop power no external power supply required.
    - Blind mount.
    - Suitable for rotary and linear valves.
    - Actuator connections in accordance with VDI/VDE 3845 and IEC 60534-6 standards.
  - **Action**
    - Double or single acting.

- **Actuator Travel Range**
  - **Linear**
    - 0° position can start anywhere, 3 to 200 mm stroke, other strokes on request.
  - **Rotary**
    - 0° position can start anywhere, max 359°
  - **Measurement range**
    - 0 to 359° with freely rotating contactless feedback shaft.
  - **Actuator travel time**
    - 0 to 300 seconds (configurable in incremental steps of 60 seconds)
  - **Actuator travel limit**
    - Freely configurable in 0 to 100%
  - **Dead band time limit**
    - 0 to 300 seconds (freely configurable, monitoring parameter until deviation reaches within dead band)

- **Environmental Condition**

  - **Standard temperature range**
    - -40° to +60°C / -40° to +140°F

  - **Low temperature range**
    - -40° to +80°C / -40° to +176°F
    - -55° to +85°C / -67° to +185°F available on request

  - **Influence of temperature on valve position**
    - 0.35% /10°K

  - **Influence of vibration on valve position**
    - <1% under 10g 5-85 Hz. 2.5 85-150 Hz
    - 1.5g, 150-280 Hz, 0.5g 280-1500 Hz

- **Construction/Enclosure**

  - **Material**
    - 2 =Weatherproof Aluminium cover and housing
    - 6 =Intrinsically safe (Ex ia) aluminium cover and housing

  - **Protection class**
    - IP66

  - **Pneumatic pressure ports**
    - 1/4” BSP
    - 1/4” NPT

  - **Cable gland**
    - 1/2” NPT
    - M20 x 1.5

  - **Weight (with gauges)**
    - Bare Positioner option 2 & 6 = 1.65 kgs / 3.63 lbs
    - Positioner transmitter /Alarm module = 0.08 kgs / 0.2 lbs

- **Pneumatics**

  - **Supply pressure**
    - 1.4 to 8 bar / 24 to 114 psi (10 bar on request)

  - **Capacity with 4 bar / 60 psi**
    - > 1 to 41 Nm^3/h / 0.5 to 23 scfm (servo-controlled orifice)

- **Consumption with 4 bar / 60 psi (Steady state)**
  - < 1 lpm / 0.037 scfm @ 4 bar

- **Instrument Air**
  - **Air Quality**
    - In accordance to ISO 8573-1
  - **Solid particles**
    - Class 5 (maximum density 3mg/m³, 5µm filtration is recommended)
  - **Humidity**
    - Class 1 (Dew point 10° C below minimum operating temperature)
  - **Oil**
    - Class 3 (maximum concentration 5 mg/m³ or < 1 ppm)

- **Electronics and Electricals**
  - **Supply Power**
    - 4 to 20 mA (2 wire system)
  - **Signal**
    - 4 to 20 mA with or without HART signal
  - **Minimum Signal**
    - ≥ 3.6 mA
  - **Current max**
    - 36 mA (with overload protection)
  - **Load Voltage**
    - 9.7 VDC @ 20 mA (max 30 VDC)
  - **Impedance**
    - 485 Ω at20 mA
  - **Wire Cross Section**
    - Screw terminals max 2.5 mm² (AWG 14)

- **Characteristics and Performance**
  - **Characteristics**
    - Linear 1:25, 1:33, 1:50, 25:1, 33:1, 50:1, and freely configurable
  - **Dead band**
    - Configurable from 0.1% to 10 %
  - **Hysteresis**
    - ≤ 0.5 %
  - **Deviation**
    - ≤ 0.5 %

- **Position Transmitter module**
  - **Output**
    - 4 to 20 mA (2 wire system)
  - **Supply Voltage**
    - 12 to 30 VDC
  - **Total Operating Range**
    - 3.6 to 21 mA
  - **Transmission Error**
    - ≤ 0.3 %
  - **Influence of temperature**
    - 0.35 % / 10° K

- **Communication**
  - **HART 5 & 7**

- **Certification**
  - **Atex**
  - **IECEx**

5. **POSIDAPT RTX 3/4 Overview**

Simplicity in mounting, ease of operation and maintenance coupled with unmatched performance are some of the highlights of the Rotex smart Positioner, listed below are some of its unique features:

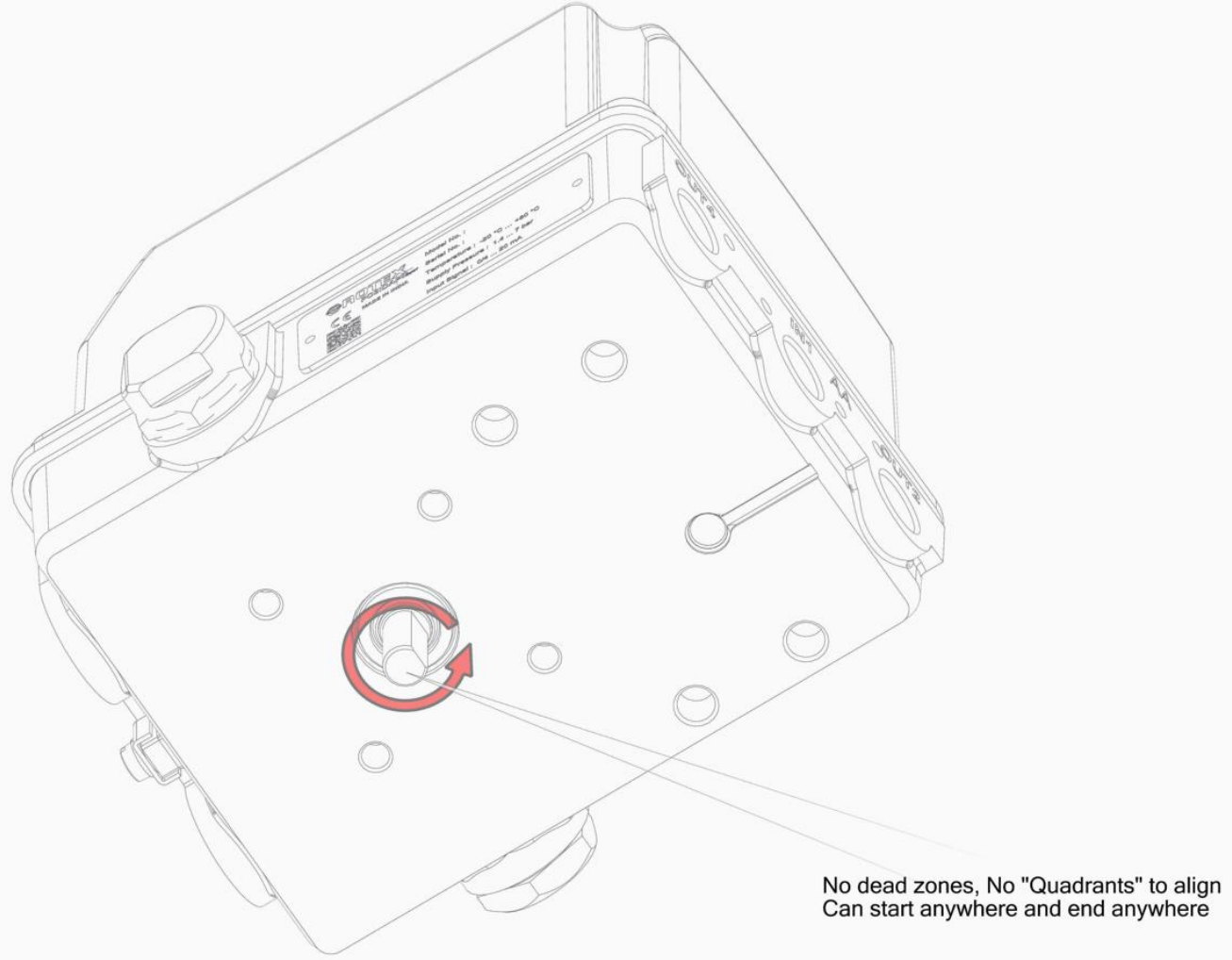

- LCD Display

a. LCD display for parameter settings
b. No abbreviation or short form used
c. User friendly interface
d. On screen display of diagnostics, alarms and error messages

- Modular design with encapsulated electronics

a. Fewer modules make it easy to install, operate and maintain.
b. Fewer numbers of internal components and moving parts, increased reliability and life span.
c. Enclosed in IP66 enclosures ensure lifetime guarantee and reliability.
d. Encapsulated electronics provide protection against moisture and humidity, avoiding failure of electronics.

- Superior functionality

a. Contactless feedback, with patented algorithm.

b. Blind mount eliminates the need to orient mounting angle.

- Feedback sensors

a. It has built in feedback sensor.
b. Preciservo operates with adaptive dual PID loop and ensures high accuracy, lower dead band and extremely steady performance of positioner, Primary loop is controlling the spool position of the Preciservo and secondary loop is controlling the actual position.
c. Dual PID loops eliminate overshoot, undershoot, hysteresis and “hunting”. ROTEX POSIDAPT can maintain a steady state and set point with the highest degree of confidence.
d. Preciservo has metal to metal contact ensuring low friction and high sensitivity.
e. Precise manufacturing assures negligible hysteresis and dead band.
f. ROTEX Preciservo valve can vary the orifice due to primary PID loop. Hence different sizes of actuators can be calibrated without the need of flow control valves or volume booster.
g. ROTEX Preciservo has built in self health check, ensures best performance and reliability during calibration and testing.

- Communication

a. ROTEX POSIDAPT RTX 3/4 is compatible with HART for version 4.
b. It is also compatible with DTM framework version 1.2.1
c. DTM and EDD based on multi-system support configuration.

Identification of the product

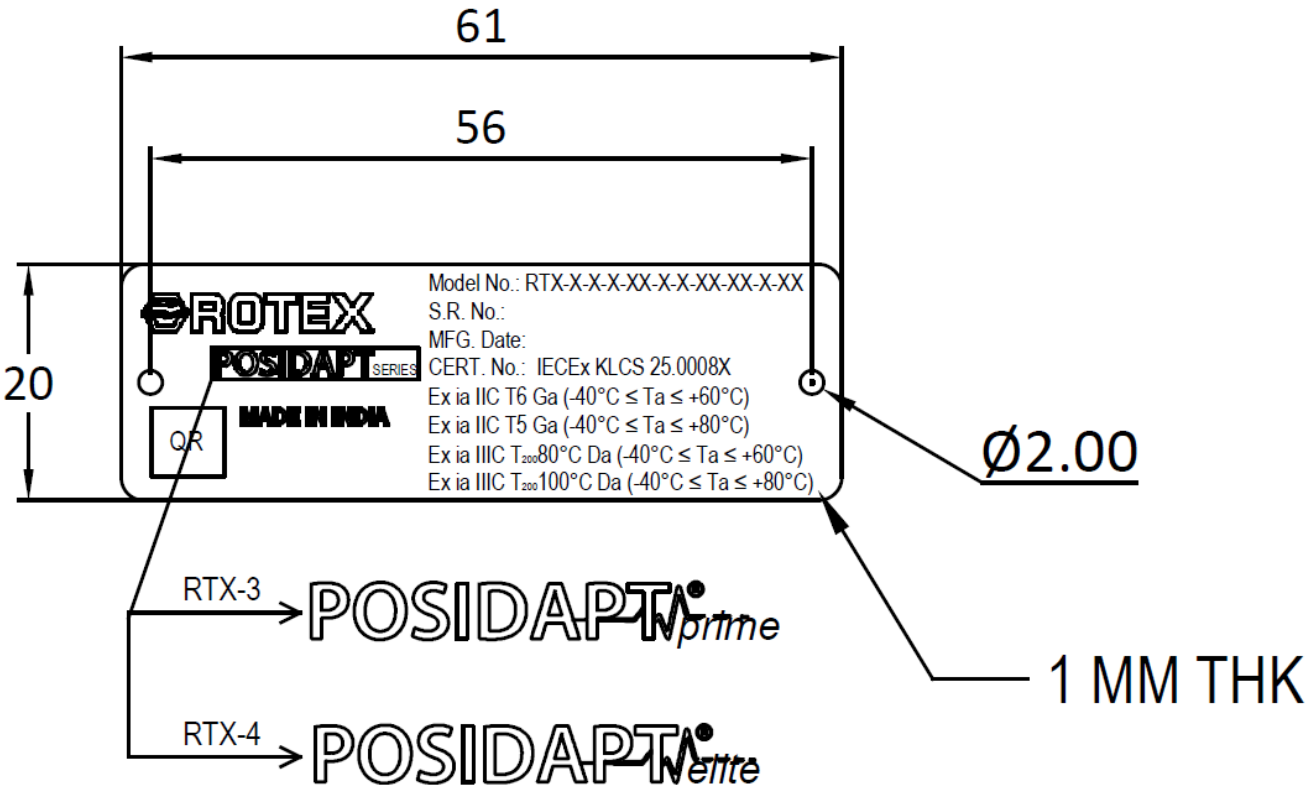

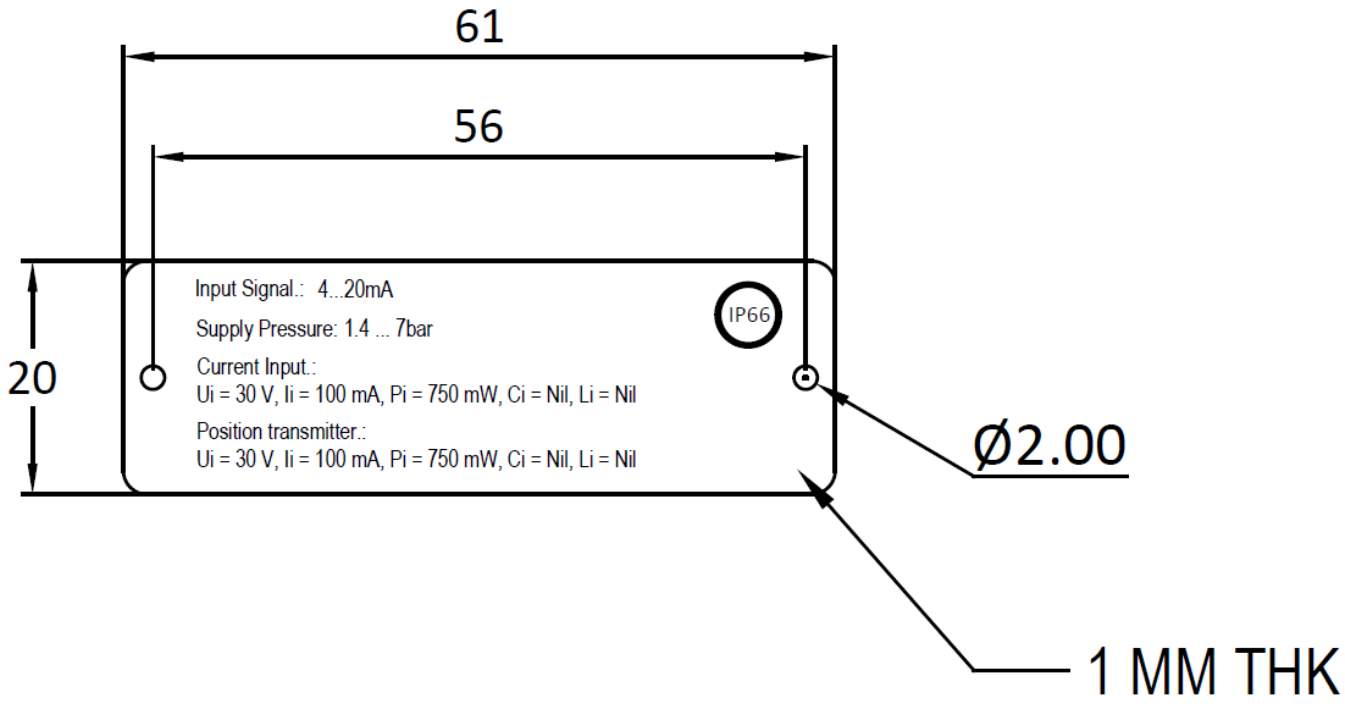

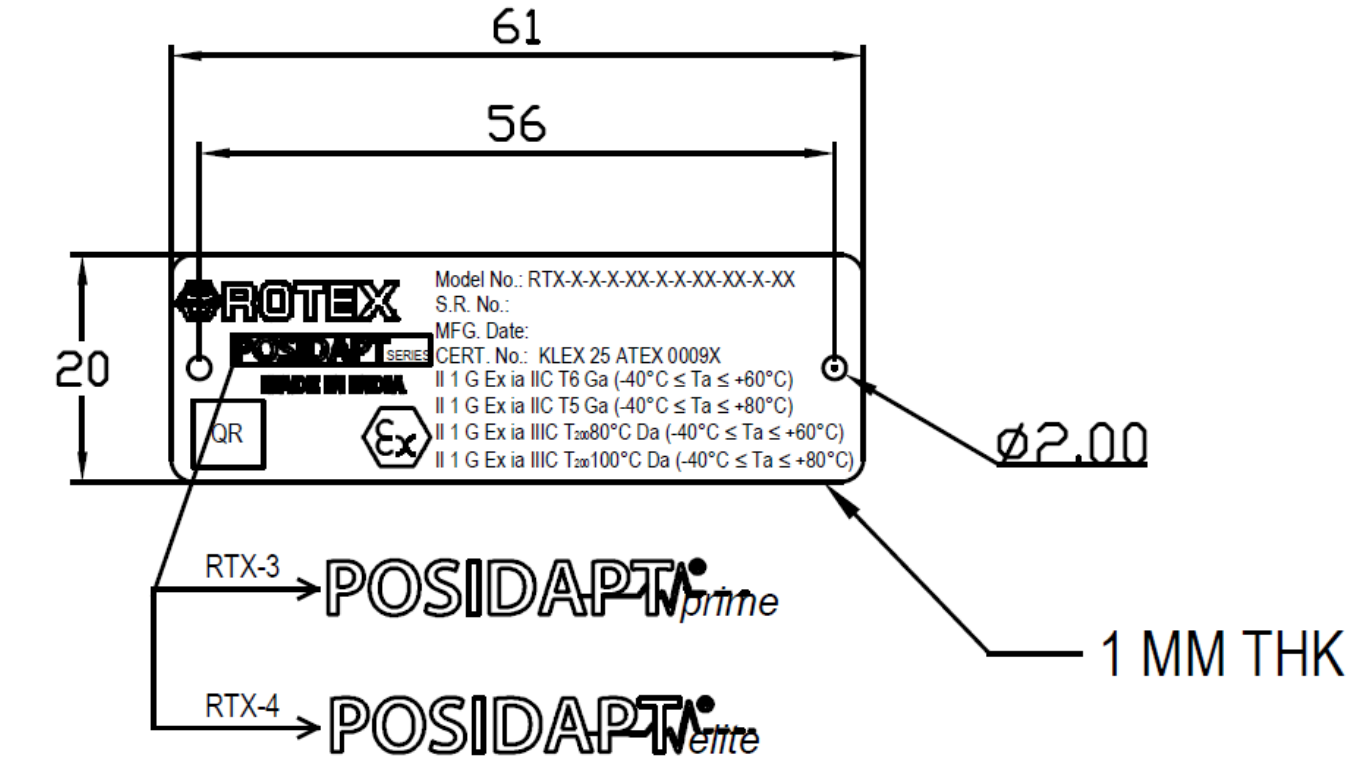

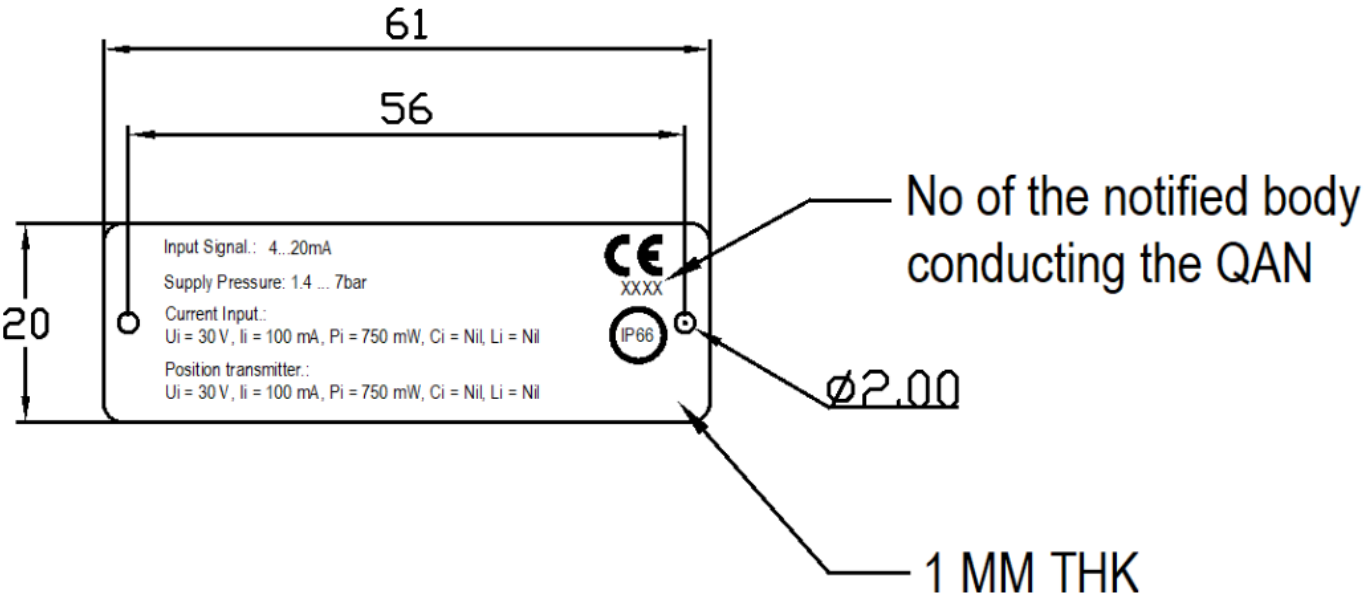

Product code breakdown

Model / Product Code for ROTEX Smart Positioner POSIDAPT Series

MODEL / PRODUCT CODE

Table	A	B	C	D	E	F	G	H	I	J	K	
Example Code	RTX	4	6	1	2R	H	P	4R	FS	A	G1	RC001
	PRODUCT CODE: A-B-C-D-E-F-G-H-I-J-K; example: RTX-4-6-1-2R-H-P-4R-FS-A-G1-RC001											

A	SERIES	POSIDAPT	RTX

B	MODEL	PRIME	3
		ELITE	4

C	ENCLOSURE	WEATHERPROOF ALUMINIUM COVER AND HOUSING	2
		Ex ia ALUMINIUM COVER AND HOUSING	6

D	SERVO	DOUBLE ACTING / SINGLE ACTING	1

E	PNEUMATIC PORT CONNECTION	1/4“ BSP	2G
		1/4“ NPT	2R

F	COMMUNICATION	NONE	*
		HART	H

G	MODULE	NONE	*
		POSITION TRANSMITTER (4 to 20 mA)	P

H	CABLE ENTRY	1/2" NPT (F)	4R
		M20 X 1.5 (F)	3M

I	TEMPERATURE	-40°C to +60°C (-40°F to +140°F) – T6 -40°C to +80°C (-40°F to +176°F) – T5	FS
J	CERTIFICATION	NONE	*
		ATEX	A

		IECEx	I

K	GAUGE BLOCK	NO GAUGE BLOCK	*
		GAUGE WITH 30 MM GAUGES (SS)	G1
		GAUGE WITH 40 MM GAUGES (SS)	G2
		GAUGE WITH 40 MM GAUGES (MS)	G3

ACCESSORIES	NONE	*
	COUPLER FOR ROTARY ACTUATOR ISO 5211	RC001
	LINKAGE FOR STROKE UP TO 100MM, PIN ON STEM	PS100
	LINKAGE FOR STROKE UP TO 200MM, PIN ON STEM	PS200
	LINKAGE FOR STROKE UP TO 100MM, PIN ON LEVER	PL100
	LINKAGE FOR STROKE UP TO 200MM, PIN ON LEVER	PL200
	BRACKET TYPE 1 KIT-MS	RC002
	BRACKET TYPE 1 KIT-SS304	RC003
	BRACKET TYPE 2 KIT-MS	RC004
	BRACKET TYPE 2 KIT-SS304	RC005
	IPTR MOUNTING KIT FOR ROTARY ACTUATOR	RC006
	COUPLER FOR SMART POSITIONER – CYLINDER APPLICATION	RC007

6. **Block Diagram:**

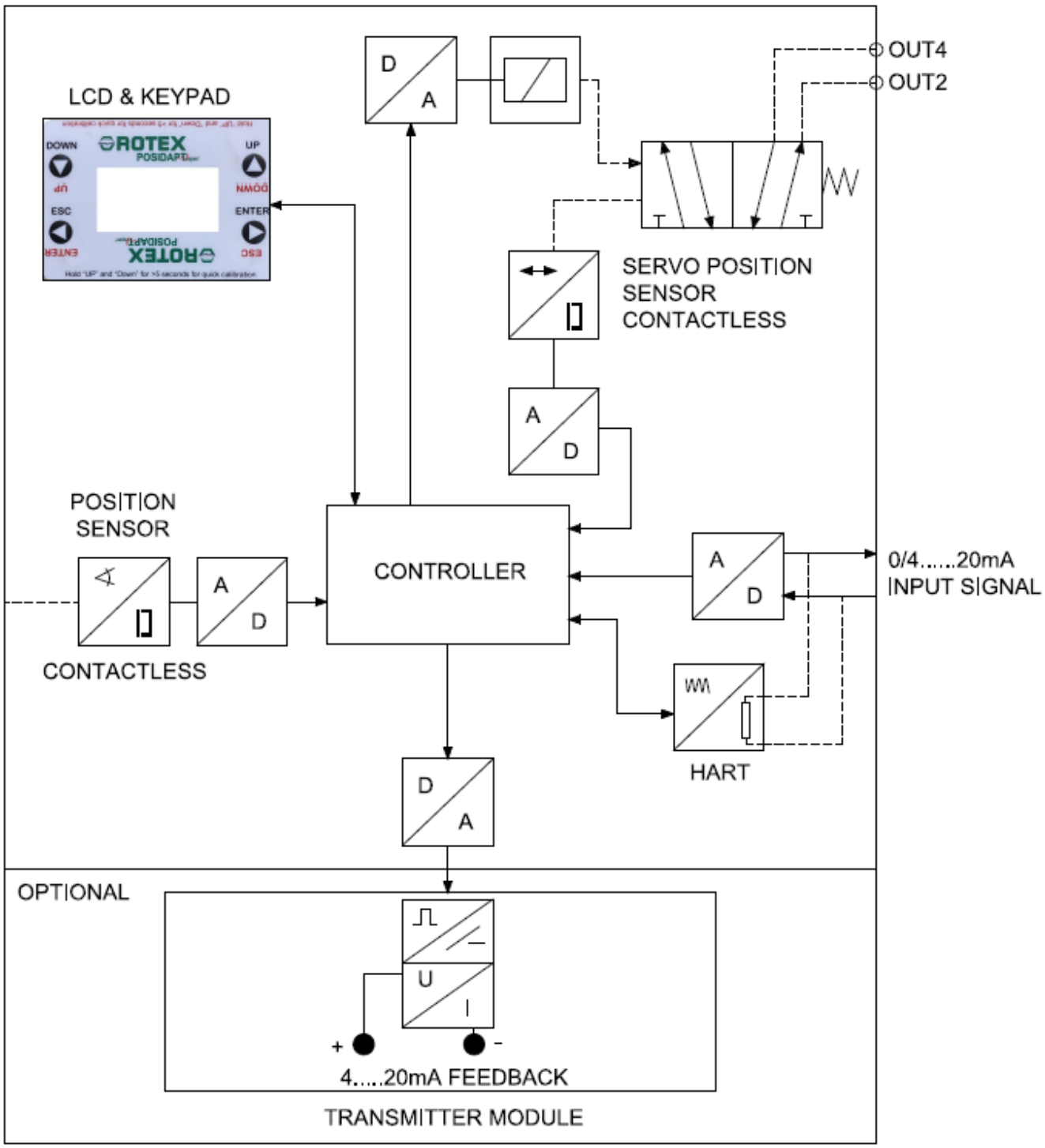
LCD & KEYPAD
DOWN
UP
ESC
ENTER
D
A
OUT4
OUT2
SERVO POSITION
SENSOR
CONTACTLESS
A
D
POSITION
SENSOR
CONTACTLESS
CONTROLLER
0/4.....20mA
INPUT SIGNAL
HART
OPTIONAL
U
I
+
-
4.....20mA FEEDBACK
TRANSMITTER MODULE

7. Dimensional Drawing:

Positioner with 40mm gauges and gauge block -

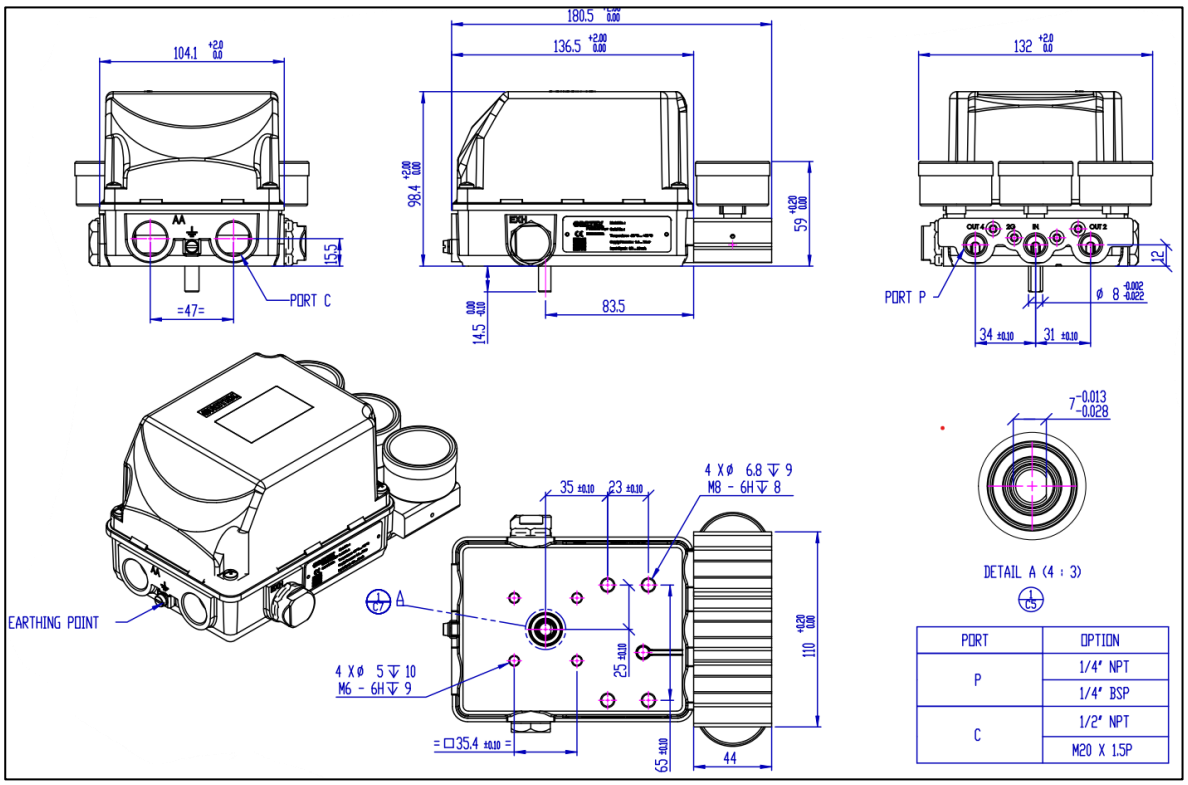

PORT	OPTION
P	1/4" NPT
	1/4" BSP
C	1/2" NPT
	M20 X 1.5P

Positioner with 30mm gauges and gauge block -

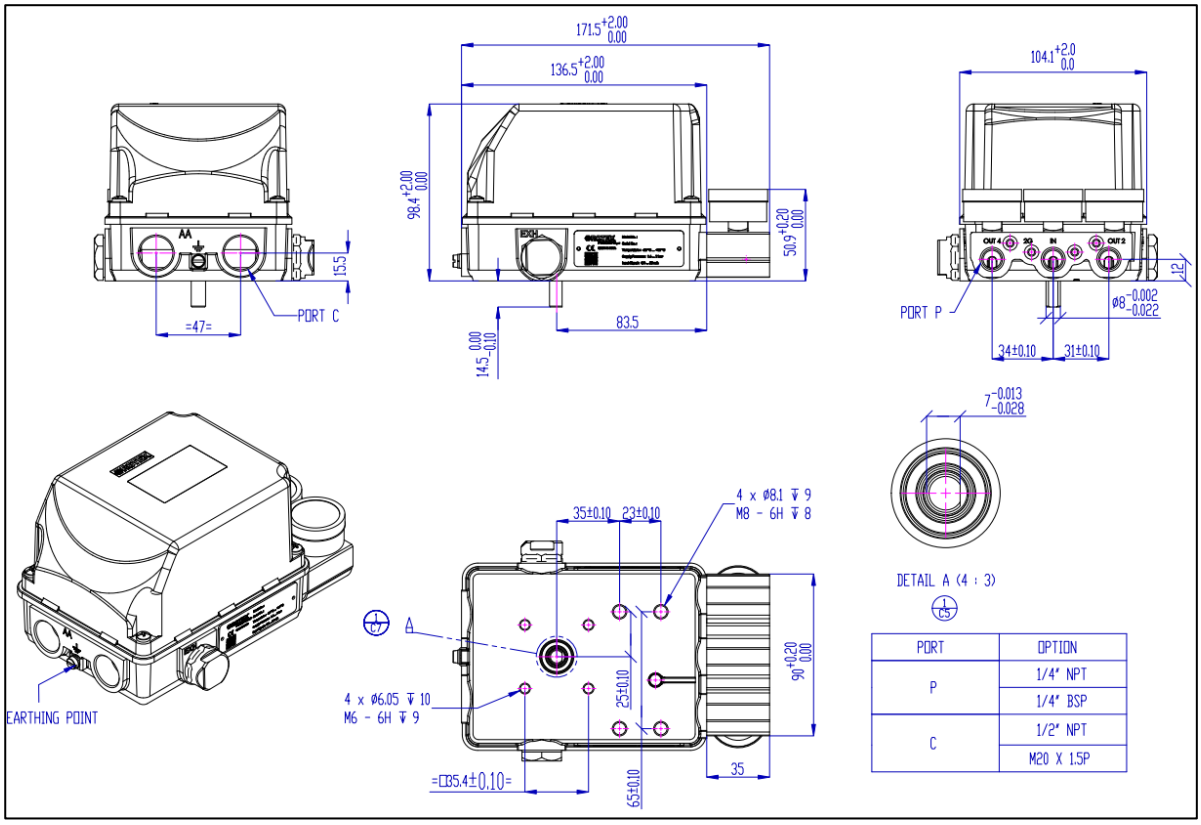

PORT	OPTION
P	1/4" NPT
	1/4" BSP
C	1/2" NPT
	M20 X 1.5P

8. Installation / Mounting:

8.1. Safety Instructions:

The equipment must be installed in the accordance with the laws, guide lines and rules applicable within the country.

WARNING:

- **ENSURE THAT SUPPLY VOLTAGE SHOULD NOT EXCEED MORE THAN > 20 % OF RATED VOLTAGE. (FOR CURRENT AND VOLTAGE RATINGS REFER CATALOGUE)**
- **NO MECHANICAL REWORK ALLOWED BY CUSTOMER. MECHANICAL REWORK CAN INCREASE CLEARANCE BETWEEN HOUSING AND COVER.**
- **DO NOT OPEN COVER / CABLE GLAND WHEN POSITIONER IS UNDER OPERATION OR IN ENERGIZED CONDITION.**

CAUTION:

THE CURRENT AND VOLTAGE LIMITATION HAS TO BE OBSERVED AS PER THE TAG PLATE.

THE WIRING AND CONNECTION SHOULD BE CARRIED OUT WITH PROPER GLAND AND CARE SHOULD BE TAKEN TO AVOID WATER SEEPAGE.

CONFIRM THE AREA IS NON-HAZARDOUS BEFORE OPENING THE COVER OF THE ENCLOSURE FOR MAKING ELECTRICAL CONNECTIONS.

THE PLUGS GIVEN ALONG WITH BOX ARE TO BE REMOVED AND METALLIC PLUG TO BE USED.

ENSURE CABLE GLAND IS PROPERLY FITTED USING SOUND ENGINEERING PRACTICE ENSURING THAT RAIN WATER / OTHER FLUIDS DO NOT ENTER IN THE SMART POSITIONER HOUSING.

CAUTION IP66:

ENSURE CABLE GLAND AND GASKET IS PROPERLY FITTED USING SOUND ENGINEERING PRACTICE ENSURING THAT RAIN WATER / OTHER FLUIDS DO NOT ENTER IN THE SMART POSITIONER HOUSING.

TIGHTEN THE COVER BOLTS FULLY TO AVOID WATER SEEPAGE INSIDE THE SMART POSITIONER HOUSING.

USE UCIL SYNCHEM MAKE GRIP SEAL CABLE JOINING COMPOUND OR EQUIVALENT TO SEAL CABLE GLAND. FOR PRECAUTION & APPLICATION OF SEALING COMPOUND USE ORIGINAL MANUFACTURERS OPERATIONAL MANUAL.



SPECIFIC CONDITIONS FOR USE OF Ex ia EQUIPMENT

- **Cleaning of the surface shall only be done with wet cloth to eliminate Electro Static Discharge risk.**
- **The POSIDAPT main electronics enclosure contains aluminium and is considered to present a potential risk of ignition by impact or friction. Care must be taken into account during installation and use to prevent impact or friction.**
- **The POSIDAPT shall be installed in such way that danger of mechanical impact on glass window is avoided.**
- **Operating temperature range should not exceed the mentioned on the tag plate.**
- **The information regarding the minimum ambient temperature for the positioner as provided in the datasheet must also be observed.**
- **The positioner is for installation in locations providing protection against the entry of moisture or dust.**
- **Appropriate certified cable glands and plugs to be used.**
- **The plugs given along with housing are to be removed and metallic plug to be used.**
- **“The purchaser should make the manufacturer aware of any External effects or Aggressive substances that the equipment may be exposed to”.**

Basic layout

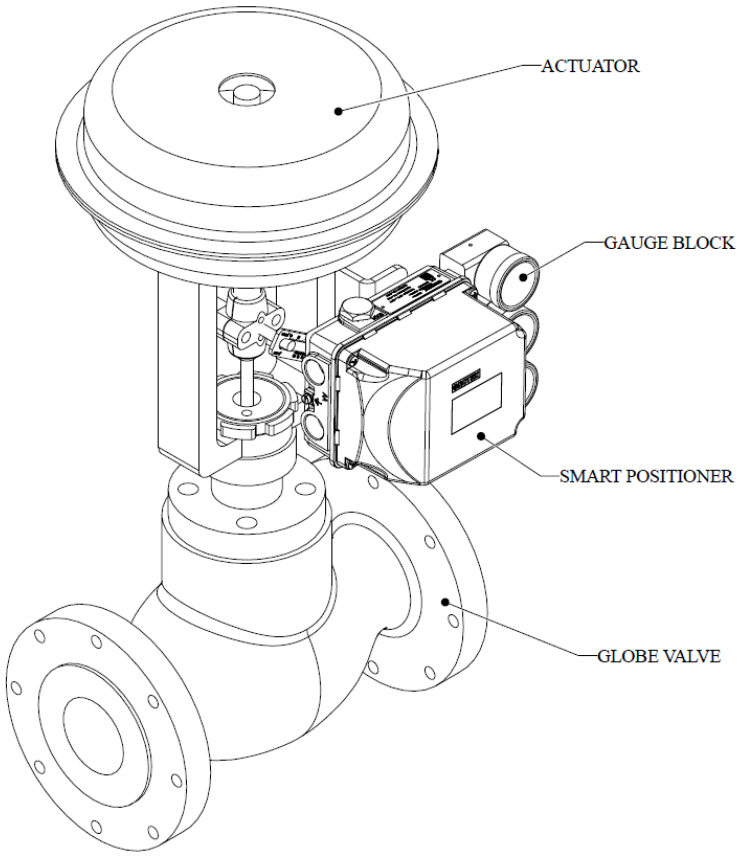

Smart positioner with Globe valve

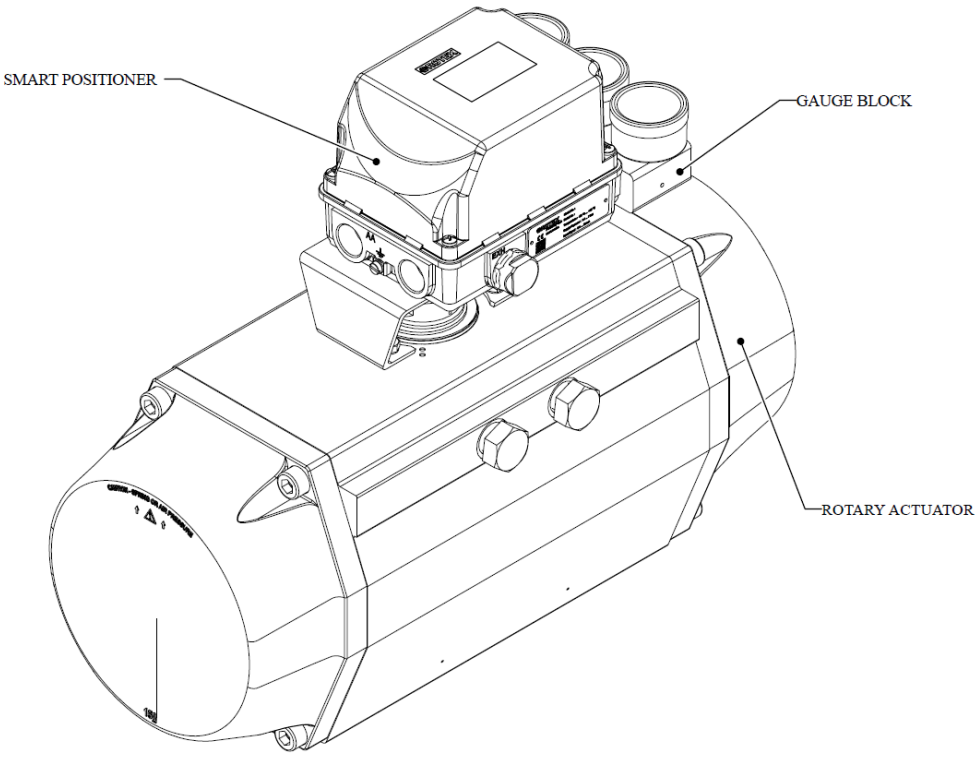

8.2. Mounting Positioner on Control Valve:

1. This section provides information regarding mounting of smart Positioner on a linear actuator

2. The table below provides the list of hardware components required for the installation of the smart Positioner on the linear actuator.

Table 1

Sr. No.	Part description	Qty	Note
1	M6 Nut	1	For fixing scale
2	Hex bolt M6 x 35 mm	1	For fixing scale
3	Linear Scale	1	For measuring travel
4	M6 spring washer	1	For fixing scale
5	M6 Plain washer	1	For fixing scale
6	M6 Plain washer	1	For fixing scale
7	Shaft	1	For attachment to the actuator
8	Spring for shaft	1	For attachment to the actuator
9	Guide bush	1	For attachment to the actuator
10	Circlip	1	For fixing shaft
11	M8 Spring washer	1	For fixing shaft
12	M8 Thin nut	1	For fixing shaft
13	M8 plain washer	2	For fixing positioner
14	M8 spring washer	2	For fixing positioner
15	Hex bolt M8 x 30 mm	2	For fixing positioner
16	Mounting bracket	1	For attaching Positioner to actuator.
17	U scale clamp	2	For fixing U scale
18	U scale	1	For better engagement
19	M5 Plain washer	2	For fixing U scale
20	M5 x 30 Allen bolt	2	For fixing U scale

21	Positioner shaft	1	For carrying rotational movement

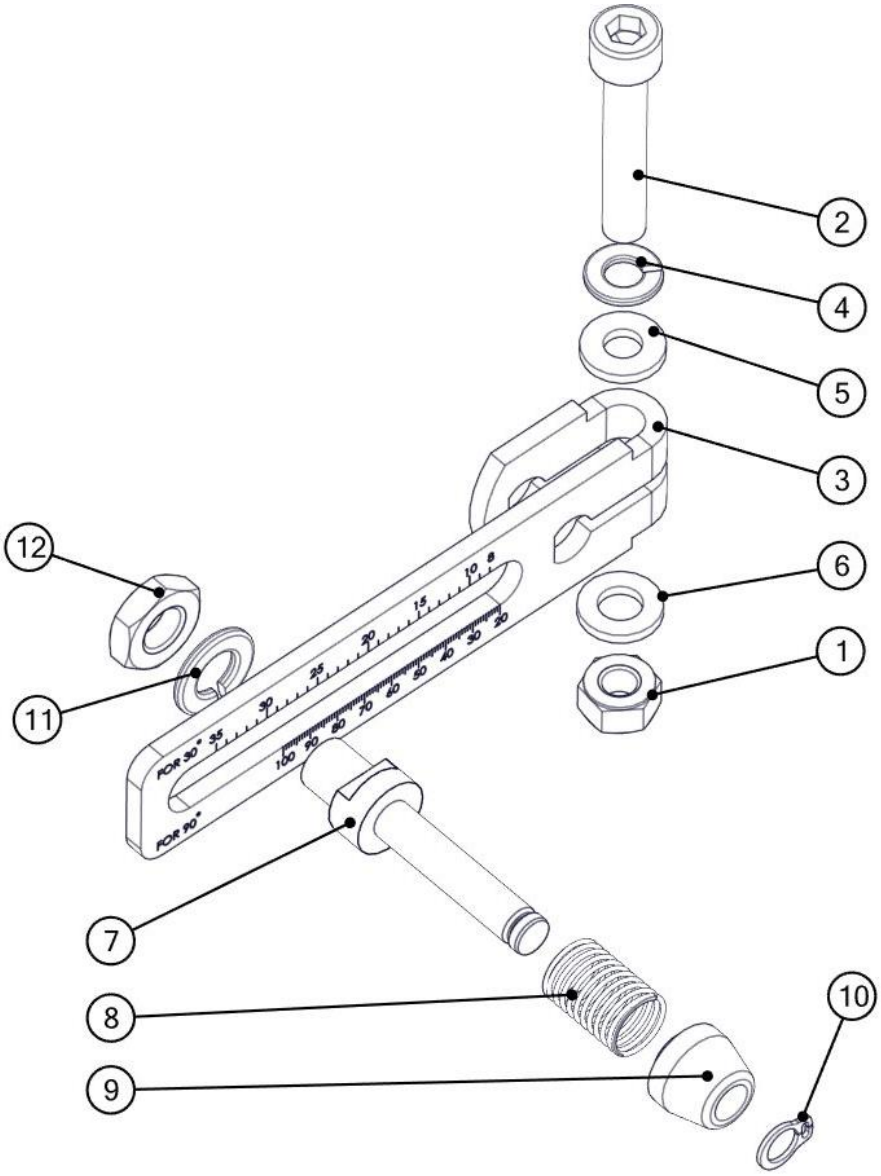

Figure 1: Linear scale assembly

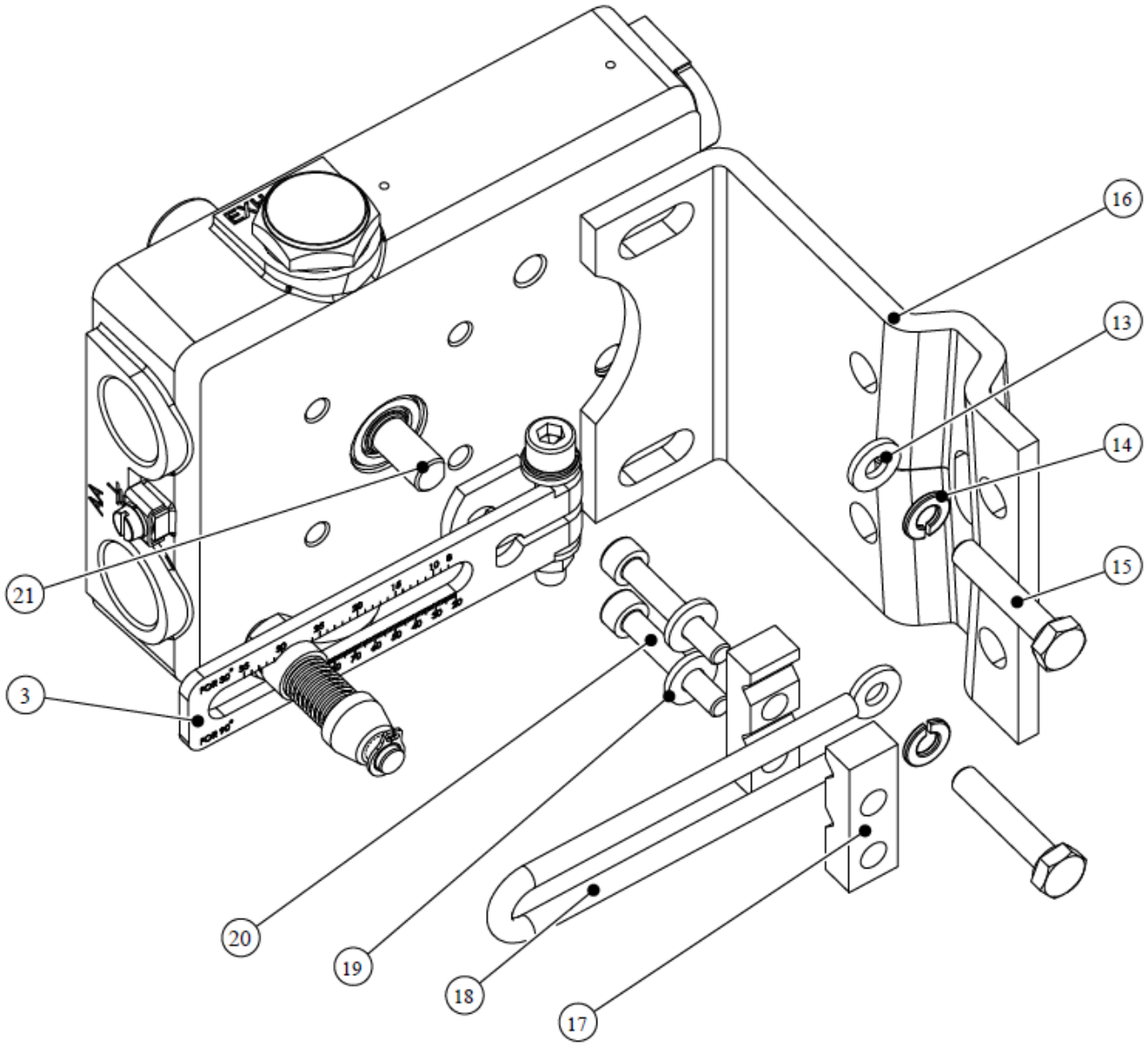

Figure 2: Attaching the linear scale and the mounting bracket

3. Assemble the linear scale assembly as shown in the figure 1.

4. Attach the mounting bracket to the Positioner as shown in the figure 2; also attach the linear scale to the shaft of the Positioner.

5. Mounting on a control valve (globe valve)

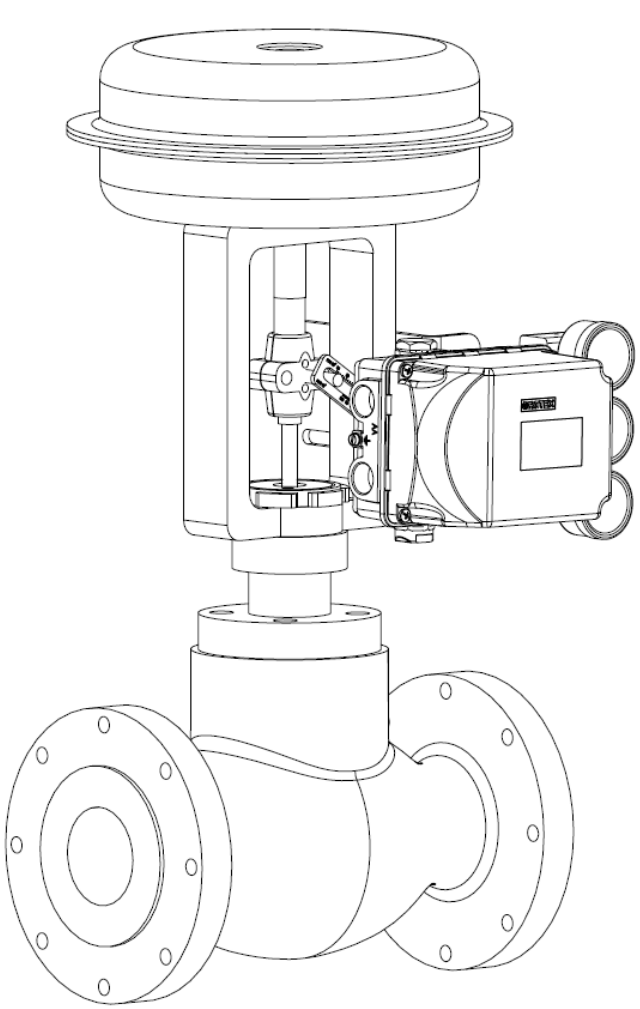

Front View

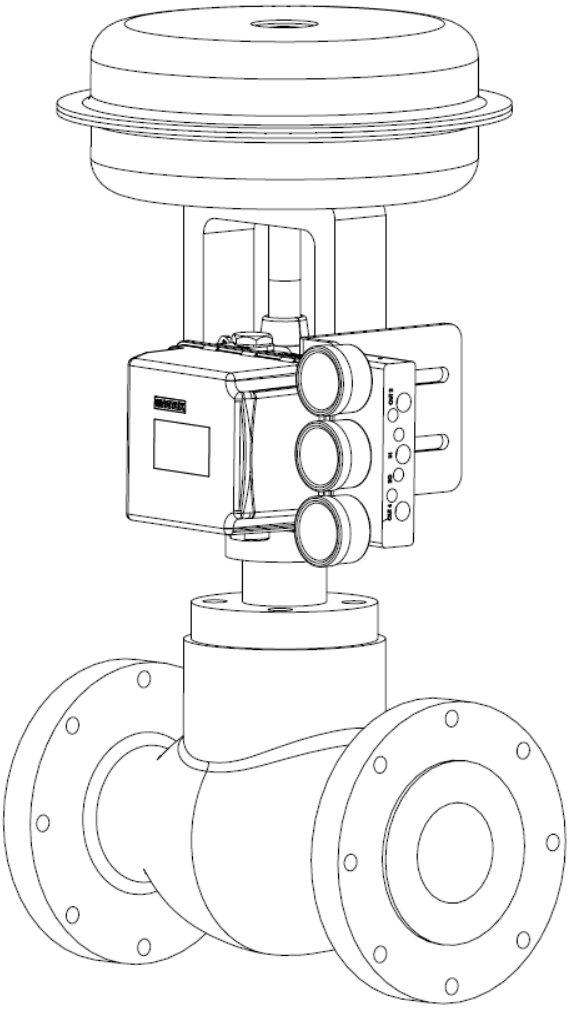

Back View

- Fix the positioner along with the mounting bracket at the centre of the control valve depending on the stroke of the control valve.
- Insert the shaft in the slot in the scale and lock it using the locking spring as shown in fig 3.
- Make sure that the scale is horizontal when calibrating the positioner.
- Secure the bolts firmly and proceed for calibration.

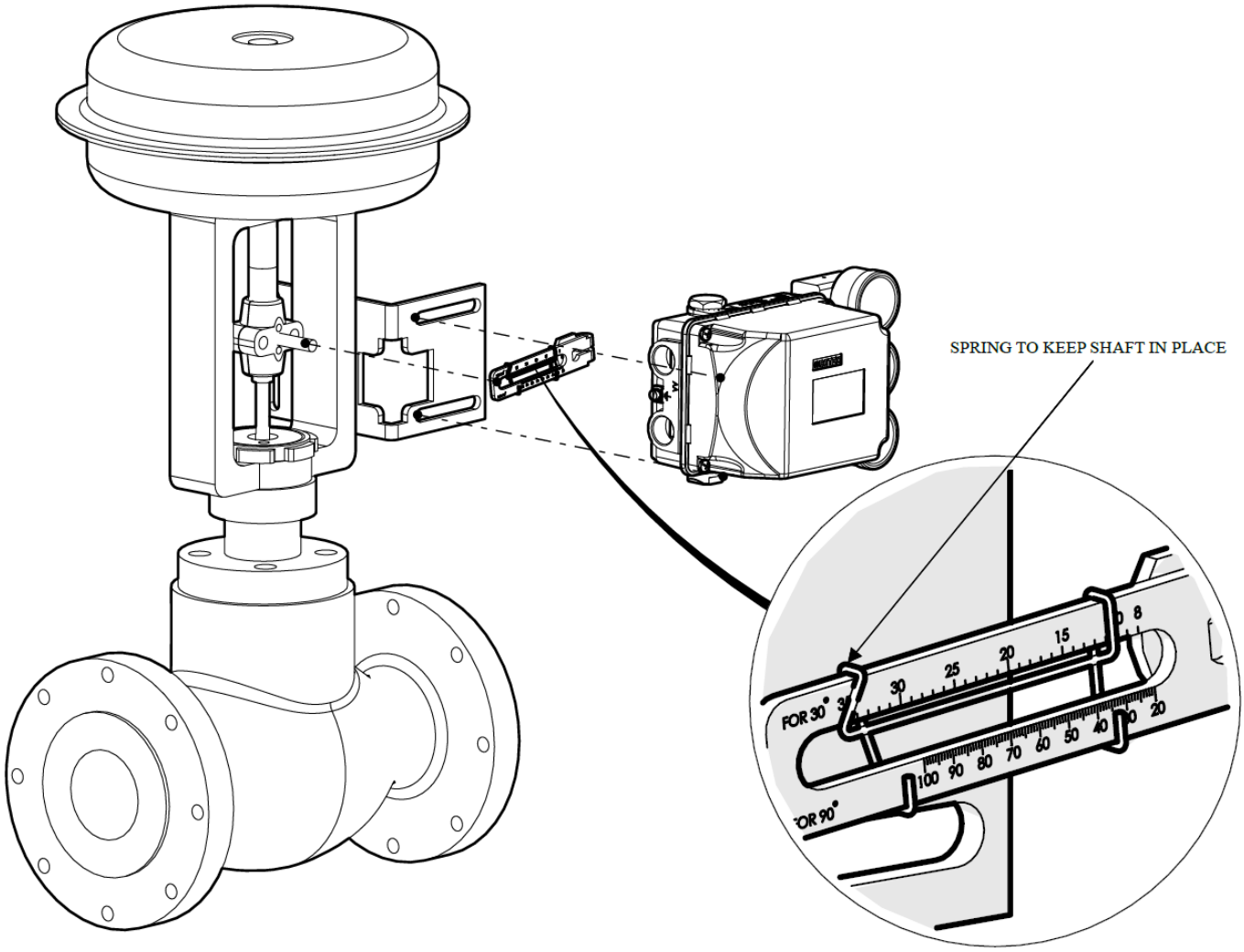

Figure 3: Detailed view of positioner with globe valve.

Note:
Adjust the height of the positioner on the cast iron yoke until the lever is horizontal (based on a visual check) at half stroke of the valve.

8.3. Mounting Positioner on a Rotary Actuator:

This section gives the instructions needed for mounting the positioner to a rotary actuator (part turn actuator).

Table 2 below gives a list of components required for the installation.

Table 2.

Sr. No.	Part description	Qty	Note
1	Std Mounting bracket	1	For attachment to the actuator
2	Plain washer M6	4	For attaching Positioner to bracket
3	Hex Bolt M6 x 12	4	For attaching Positioner to bracket
4	Hex bolt M5 x 12	4	For attaching bracket to actuator
5	Plain washer M5	4	For attaching bracket to actuator
6	Grub screw M5 X 10	2	For attaching coupling to shaft
7	Coupling	1	Link between Positioner and actuator

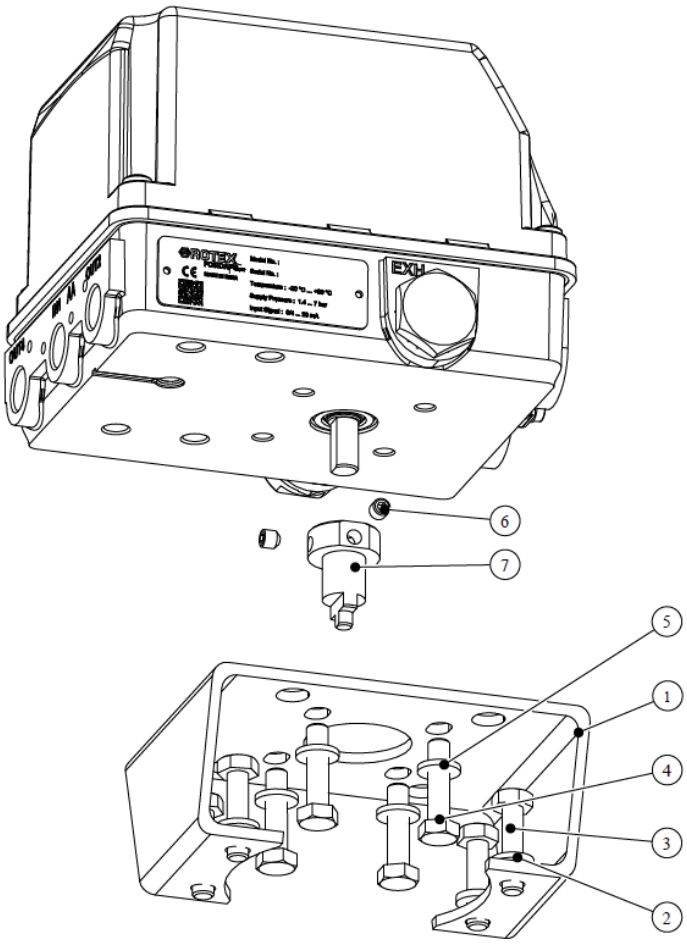

Figure 4: Attaching the coupling and the bracket to the positioner

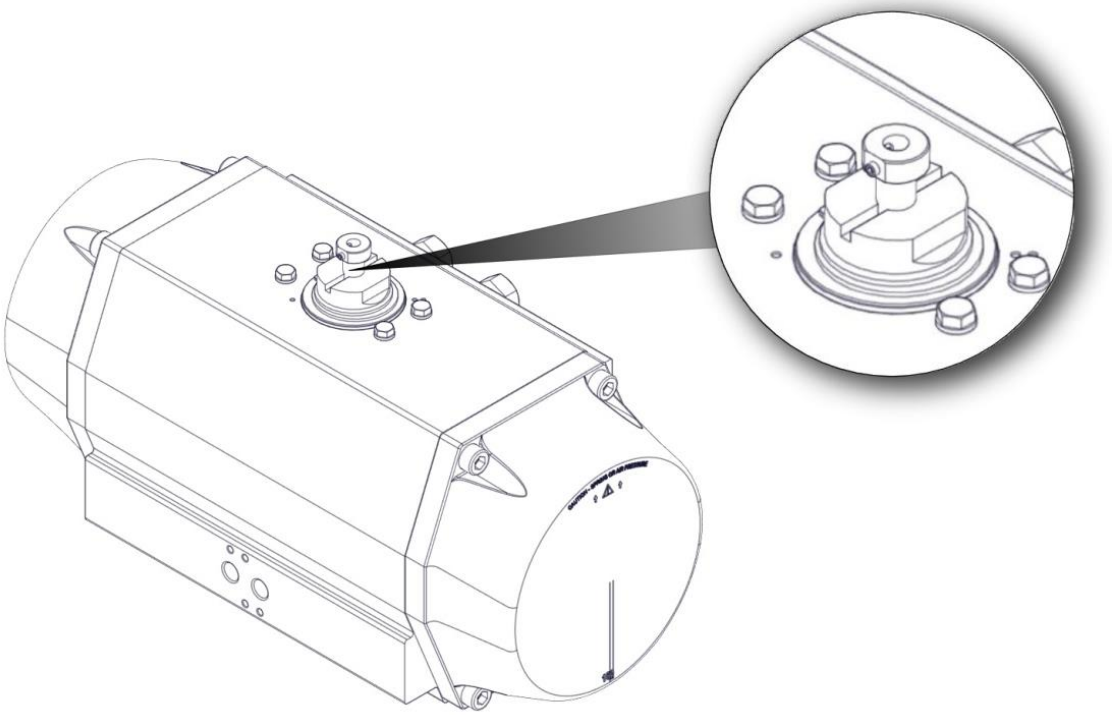

Figure 5: Inserting coupling in shaft of the rotary actuator

Mounting Instructions (rotary actuator):

1. Attach the mounting bracket to the smart Positioner using the Hardware items indicated in the figure above.
2. Attach the coupling securely using grub screws as indicated in the figure above.
3. The assembly is then mounted on the actuator (refer figure 6 below) while taking care that the shaft enters in the slot of the actuator pinion.
4. Assembly of Positioner and actuator should allow the play between shaft and pinion and never between actuator body and bracket.
5. Secure the bolts tightly and proceed for calibration.

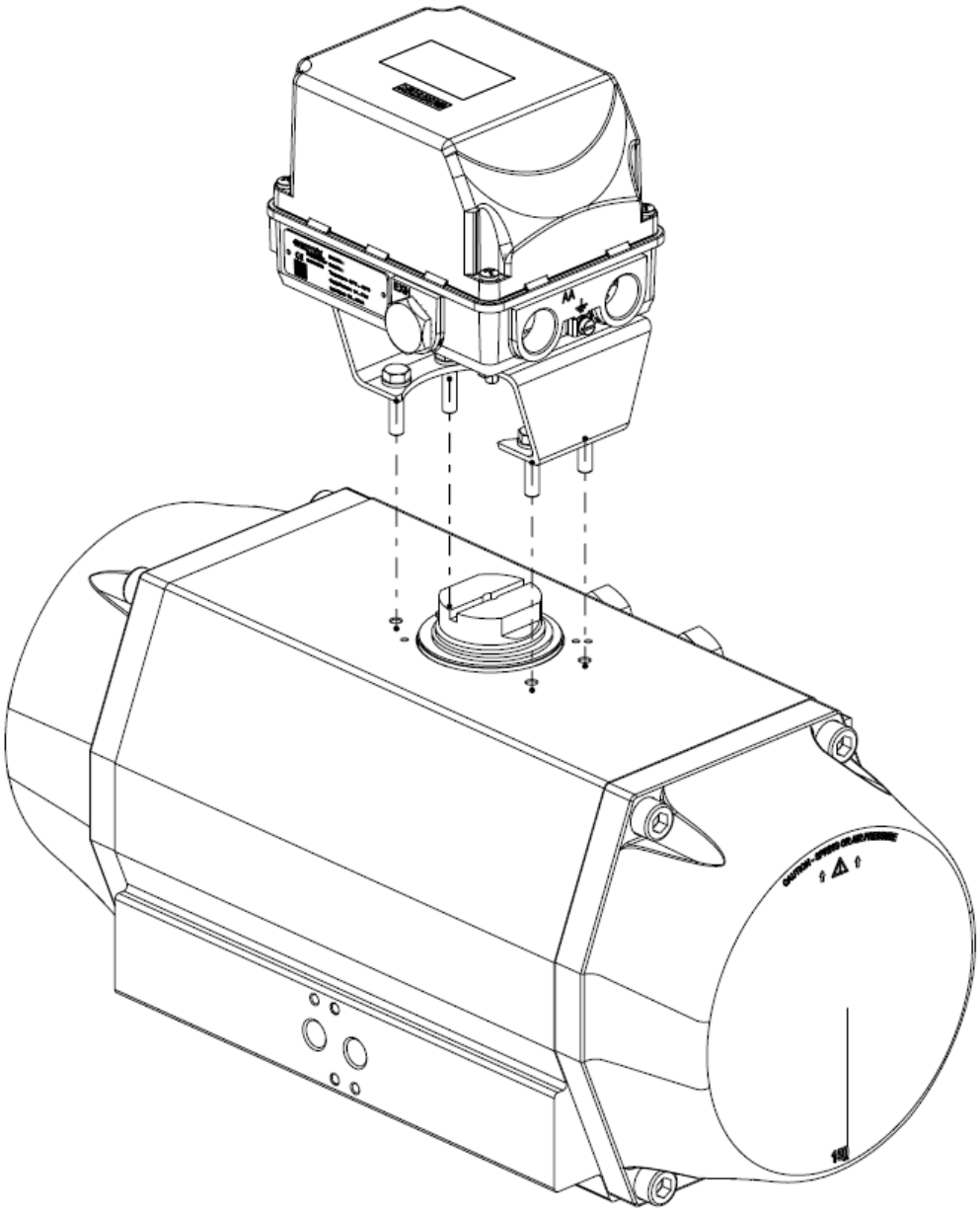

Figure 6: Mounting the Positioner on a rotary actuator

9. Electrical Connection

Connection Details in intrinsically safe version for Smart Positioner RTX3/4

Figure: Two-wire connection, EEx i

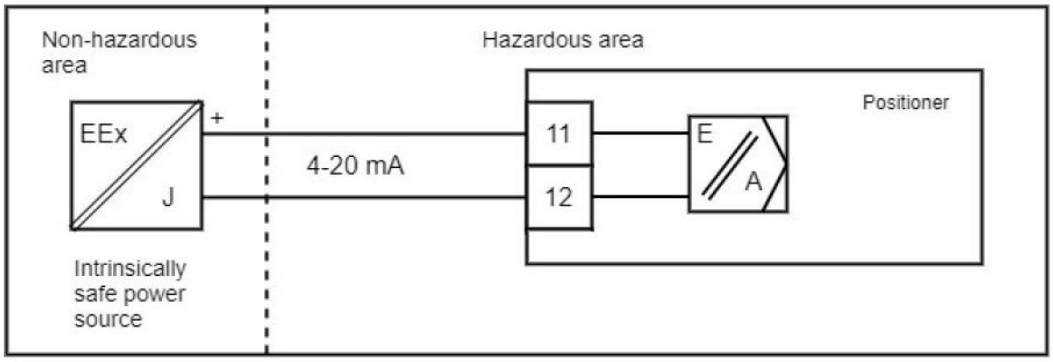

Entity Parameters:

2-wire device (with HART Protocol) control current 4…20 mA Terminals 11+ and 12	Type of protection: Ex ia Only for the connection to certified intrinsically safe circuits (maximum value)				
	Vmax	Imax	Pi	Ci	Li
	30 V	100 mA	750 mW	0	0

Figure: Position Transmitter Module (Current Output), EEx i

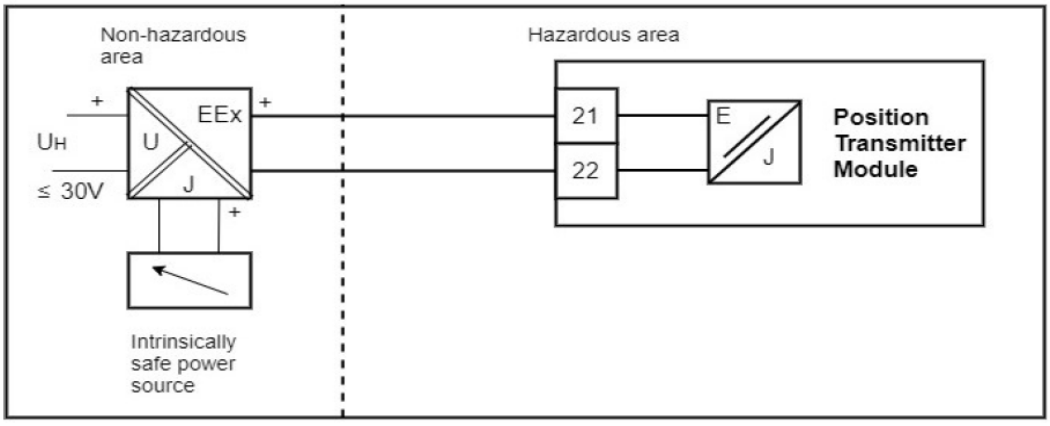

Entity Parameters:

Position transmitter module Terminals 21+ and 22	Type of protection: Ex ia Only for the connection to certified intrinsically safe circuits (maximum value)				
	Vmax	Imax	Pi	Ci	Li
	30 V	100 mA	750 mW	0	0